LegacyPlus 7-OR SERIES RETURN TRANSMITTER
INSTRUCTION MANUAL
7-OR-RT/xxx

INSTRUCTION MANUAL

Phone: (209) 586-1022
(800) 545-1022
Fax: (209) 586-1026
E-Mail: salessupport@olsontech.com
www.olsontech.com

025-371546 Rev X1

11-20-06

TABLE OF CONTENTS

SAFETY WARNINGS Page 3

INTRODUCTION Page 4
Figure 1 - 7-OR-RT Module

INSTALLATION Page 4

Installation/Environmental Considerations Page 4

Optical Connectors and Cleaning Page 5

External Test Points Page 5

User Interface Page 5

Electrical, Environmental & Mechanical Parameters Page 5

Alignment Procedure Page 6
Figure 2 - RF Drive Level & RF Drive Test Point Levels vs. Loading

Checking the Laser RF Drive Level Page 7
Table 1 - Fabry-Perot Transmitter Setup
Table 2 - DFB Transmitter Setup

Programming the 7-OR-RT to Support Automatic Shutdown Page 8
Figure 3 - Location of Laser RF Drive Test Point and RF Drive Level Adjustment Control

Connecting the Pigtail to the Return Fiber Page 9
Figure 4a - ALERT ON Mode
Figure 4b - ALERT OFF Mode
Table 3 - All Test Points

TEST POINTS AND CONTROL - REFERENCE Page 10
Figure 4 - All 7-OR-RT Test Points and Controls
Figure 5 - Mounting the 7-OR-RT Return Transmitter into the 7-OR Node

SAFETY WARNINGS

LASER RADIATION

The 7-OR laser transmitter emits invisible laser radiation that can cause permanent eye damage. ***AVOID DIRECT EXPOSURE TO BEAM***. Operate the transmitter only with the proper optical fiber installed in the transmitter optical connector. The power to the 7-OR should be turned off whenever the optical connector is opened or exposed (as when the fiber connection is being installed or removed from the transmitter connector).

***NEVER* USE ANY OPTICAL INSTRUMENT TO VIEW THE OUTPUT OF THE LASER TRANSMITTER. "OPTICAL INSTRUMENT" INCLUDES MAGNIFYING GLASSES, ETC.**

***NEVER* LOOK INTO THE OUTPUT OF THE LASER TRANSMITTER**

***NEVER* LOOK INTO THE OUTPUT OF A FIBER CONNECTED TO A LASER TRANSMITTER.**

***NEVER* LOOK INTO OR USE ANY OPTICAL INSTRUMENT TO VIEW THE DISTANT END OF A FIBER THAT MAY BE CONNECTED DIRECTLY OR VIA AN OPTICAL SPLIT, TO A TRANSMITTER THAT MAY BE OPERATING. THIS SPECIFICALLY APPLIES TO FIBERS THAT ARE TO BE CONNECTED TO RECEIVERS OR OTHER DEVICES AT ANY DISTANCE FROM THE LASER TRANSMITTER.**

SHOCK HAZARD

Care should be used when installing the 7-OR to prevent shock and injury as there are voltages within the Node which exceed 48 V_{AC}.

INTRODUCTION

The Olson Technology Inc. 7-OR-RT is a high quality, cost effective, Return Transmitter module designed around the latest optical transmitter technology. It is designed to operate and meet full specifications with an optical output level of 1 to 3 mW. The 7-OR-RT module is shown in Figure 1.

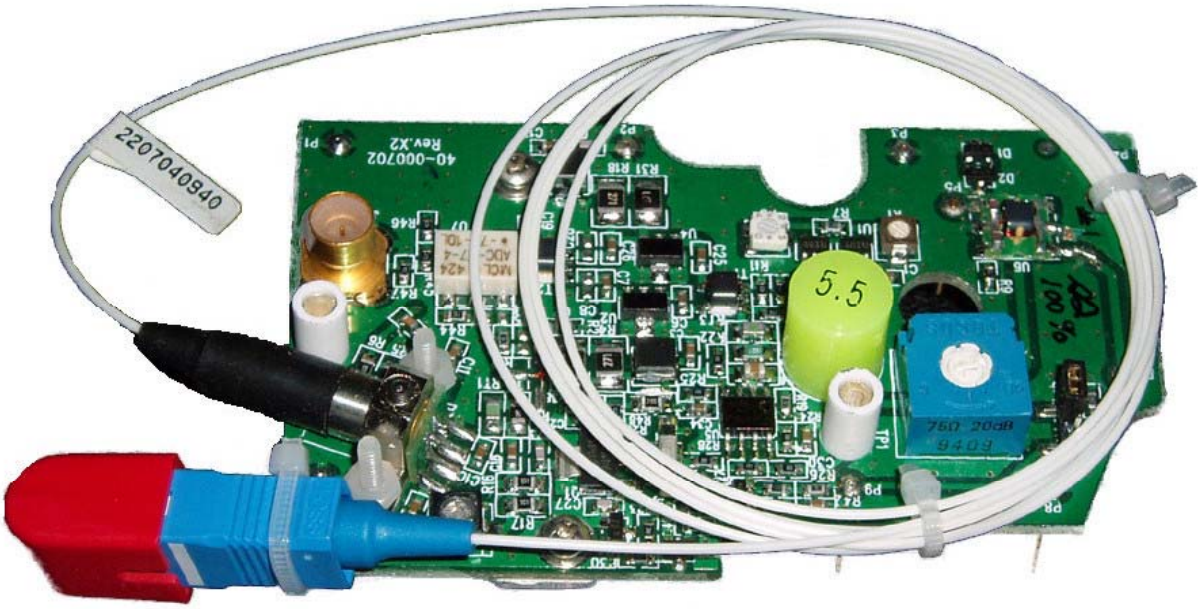

Figure 1 - 7-OR-RT Module

INSTALLATION/ENVIRONMENTAL CONSIDERATIONS

The 7-OR-RT operates with an exterior temperature on the Node of -40 to + 60°C. However, like any other electronic device, it will probably have a longer life span if it is not operated at the upper limit of it's temperature range continuously. Installation of the 7-OR-RT should be done such that water, dirt and other contaminates do not enter either the Node or the module. Do not install equipment in locations that are accessible by either children or other unqualified personnel. This unit is meant to be field-installed into the DiamondPoint 7-OR Optical Node by qualified field service technicians.

To plug the return transmitter module into the optical receiver's main circuit board, follow these steps:

1. With a TORX TX09 driver, loosen the seven screws holding the optical cover in place. Notice that besides protecting the optical receiver's main circuit board, the optical cover also has markings that indicate where you will install the 7-OR-RT return transmitter. See Figure 5 for a detailed view.
2. Flip the optical cover up and over, so that it lays bottom-side up in the cover of the 9-ORH optical housing.
3. Plug the 7-OR-RT into the 7-OR optical receiver. The pins on the underside of the 7-OR-RT fit directly into the holes in the 7-OR module's main circuit board. The return transmitter's circuit board rests on top of the 7-OR receiver's factory-installed optical pigtail.

NOTE: Be sure the fiber termination of the incoming fiber matches that of the transmitter, an easy way to tell is by the color of the termination. The transmitter will have either a green SA/APC, or a blue SC/UPC connector. The incoming fiber connector MUST match this color. If the connector is green, but the fiber termination is blue (or vice versa), then the signal passing through the fiber will be degraded and in many cases unusable.

OPTICAL CONNECTORS AND CLEANING

The standard optical connector provided with the 7-OR-RT is an SC/APC with an 8° angle. No tools are required for connection to/from this type of optical connector. The fiber ends can be damaged by the insertion of contaminated connectors into a bulkhead or receptacle, or by the insertion of a clean connector into a dirty bulkhead. Fiber connectors should never be left uncovered. Optical connectors should be cleaned before usage.

Warning: When powered, optical transmitters generate invisible, high-energy laser beams. Even when the transmitter is not powered, laser beams may be present in the incoming cable. Although you can't see them, these beams can cause tissue injury, including permanent eye damage. Whenever the optical cable is disconnected from the receiver or patch panel, avoid direct contact with the end of the cable. Be absolutely certain the optical equipment at both ends of the cable is powered off before attempting to clean connectors.

1. Power off the optical equipment at either end of the optical cable designated for cleaning. Verify the power is off by checking the power indicator LEDs.
2. If the connector is plugged into an adapter or bulkhead, unplug it and cover the connector with a clean cap.
3. If there's a cover on the adapter or bulkhead, remove it. Spray the inside of the adapter or bulkhead with compressed air, using a can of compressed air equipped with an extension tube.
4. Clean the bulkhead or adapter by flushing it with 90% isopropyl alcohol without additives or using a stick-type cleaner. Let the alcohol dry.
5. Remove the protective cap from the connector, then spray the connector face with compressed air.
6. Next, clean the connector face using a lint-free tissue moistened with 90% isopropyl alcohol without additives. Carefully clean the connector face.
7. Once you have finished cleaning the connector, align the connector key with the slot in the bulkhead or adapter, and install the connector into place.

EXTERNAL TEST POINTS

The 7-OR-RT has three external test points. The first is for optical power output calibrated at 1V/mW. It should be monitored with a high impedance voltmeter. This test point is for long term monitoring purposes. The optical output power should be measured using an optical power meter at the time of installation. The second is an RF test port for monitoring the RF drive level to the laser. The nominal drive level is +8dBmV per channel with 6 channel loading. Consult the checklist for the exact value. The third is a test point for laser bias current calibrated at 20mV/mA. It should be monitored with a high impedance voltmeter. This test point is for long term monitoring purposes.

USER INTERFACE

Laser RF Drive Level Test Point	About +8dBmV/channel for 6-channel loading (See Figure 2)
Optical Output Level	1V/mW
Laser Bias Current	20mV/mA

ELECTRICAL, ENVIRONMENTAL & MECHANICAL PARAMETERS

Dimensions *(WxHxD)*	3.2" x 1.95" x 1.0" (8.1 cm x 5.0 cm x 2.5 cm)
Weight	<0.5 lbs (0.22 kg)
Operating Temperature Range	-40 to +70ºC *(temperature at the mounting plate)*
Powering	+12 V_{DC}
Power Dissipation	< 2 W
Mounting	Inside Magnavox/Philips DiamondPoint 7-OR optical node

ALIGNMENT PROCEDURE

The 7-OR-RT optical transmitter's OMI has been optimized with an RF drive level of about +8.0dBmV per carrier with maximum loading (Six analog carriers) at the Laser RF Drive test point. Due to the number of different configurations offered for the DiamondPoint 7-OR node, the amount of loss through the node can vary, therefore transmitter drive levels should be set via the Laser RF Drive test point.

The chart below shows the drive levels are required for a given number of channels or QAM/QPSK loading. For Example, if the transmitter is going to be loaded with three video channels, than the Laser RF Drive test point needs to be approximately +10.5dBmV per carrier.

If QAM, QPSK, or similar digital loading is being used, than the loading is calculated by total bandwidth rather than the number of channels. If loading from 5 to 29MHz, then the total input bandwidth is 24MHz. The chart below shows us that 24MHz of bandwidth is equivalent to four video channels, resulting in an Laser RF Drive test point level of +9.0dBmV per channel.

Note: The numbers discussed throughout this manual are based on a typical DFB laser based transmitter. Transmitters using FP lasers typically have RF levels 4 dB lower than DFB laser based transmitters. Transmitters using CWDM lasers have RF drive levels about 6 dB lower than Standard DFB laser based transmitters.

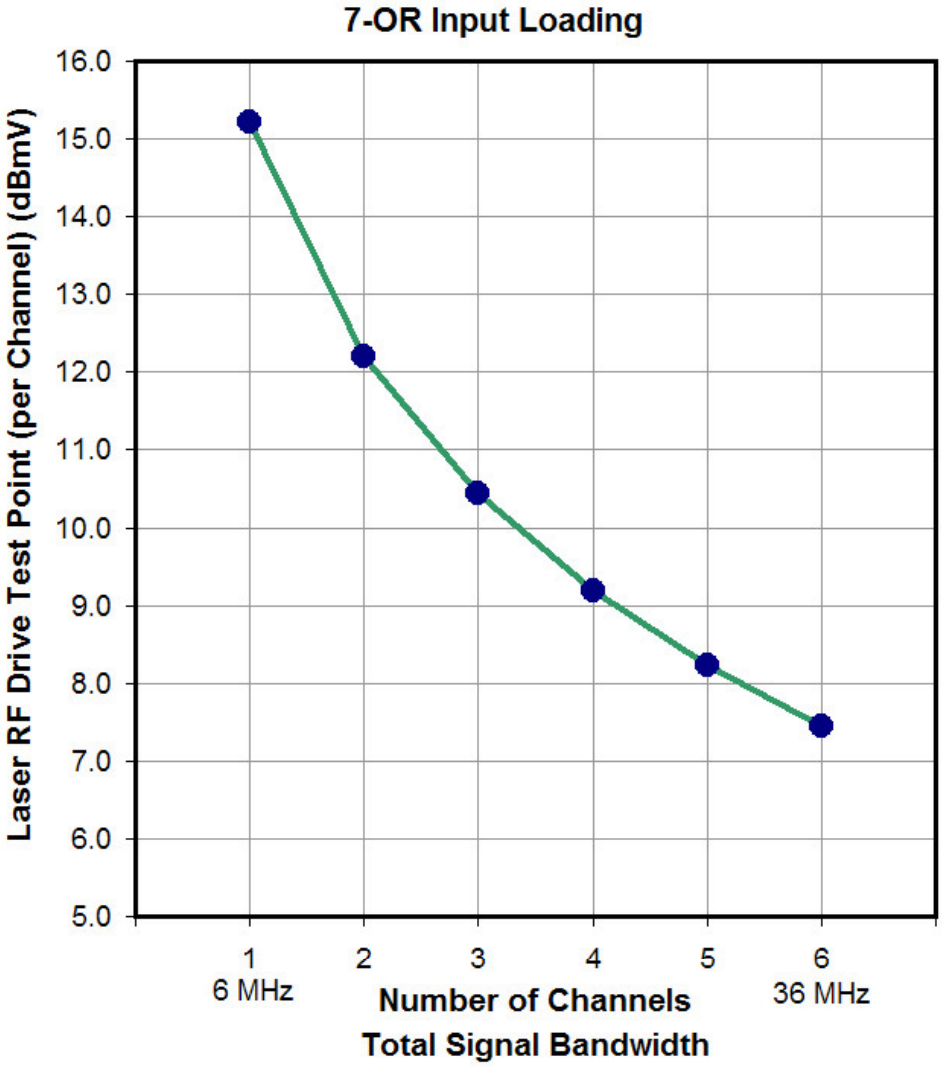

Figure 2 - RF Drive Level & RF Drive Test Point Levels vs. Loading

CHECKING THE LASER RF DRIVE LEVEL

For best performance, you will check and adjust the Laser RF drive level into the return transmitter You can measure this level using the Laser RF Drive test point and the procedure below.

1. Attach 7-OR-RT TP Tool RF test point adapter to the return transmitters Laser RF Drive test point, shown in Figure 3. Connect the other end of the adapter to a spectrum analyzer.
2. Next, you will use the RF test point to check that the return transmitter's RF drive level matches a desired level, which depends upon the channel loading of the return signal. Each 7-OR-RT comes with a checklist with the drive level noted for 35MHz loading. This indicates the level of the video pilot at the RF test point, in dBmV, for a return signal with one video channel. Refer to the tables below for information about other channel loadings.
3. Rotate the RF Drive Adjustment control, shown in Figure 3, until you obtain the desired level.

Table 1 - Fabry-Perot Transmitter Setup

Setting Up Fabry-Perot Transmitters	
Return Channel Loading	**Level at RF Drive Test Point**
1 Video	Refer to level printed on checklist
1 Video and 1 Data	Set video channel to level printed on checklist. Set data channel 10 dB below the video channel*
1 to 10 Data Only	Set data channel(s) 11 dB below level printed on checklist
*If the data channel frequency is below the video channel frequency, do not choose a video channel frequency that is a multiple of the data channel frequency. For example, if the data pilot frequency is 10 MHz, avoid placing the video pilot at 20 MHz, 30 MHz, etc.	

Table 2 - DFB Transmitter Setup

Setting Up DFB Transmitters	
Return Channel Loading	**Level at RF Drive Test Point**
1 Video	Set level 8 dB higher than level printed on checklist
2 Video	Set level 5 dB higher than level printed on checklist
3 Video	Set level 3 dB higher than level printed on checklist
4 Video	Set level 2 dB higher than level printed on checklist
5 Video	Set level 1 dB higher than level printed on checklist
6 Video	Set at level printed on checklist
Video and Data	Set video channel to level indicated above. Set data channel 10 dB below the video channel level*
1 to 10 Data Only	Set data channel(s) 11 dB below level printed on checklist
*If the data channel frequency is below the video channel frequency, do not choose a video channel frequency that is a multiple of the data channel frequency. For example, if the data pilot frequency is 10 MHz, avoid placing the video pilot at 20 MHz, 30 MHz, etc.	

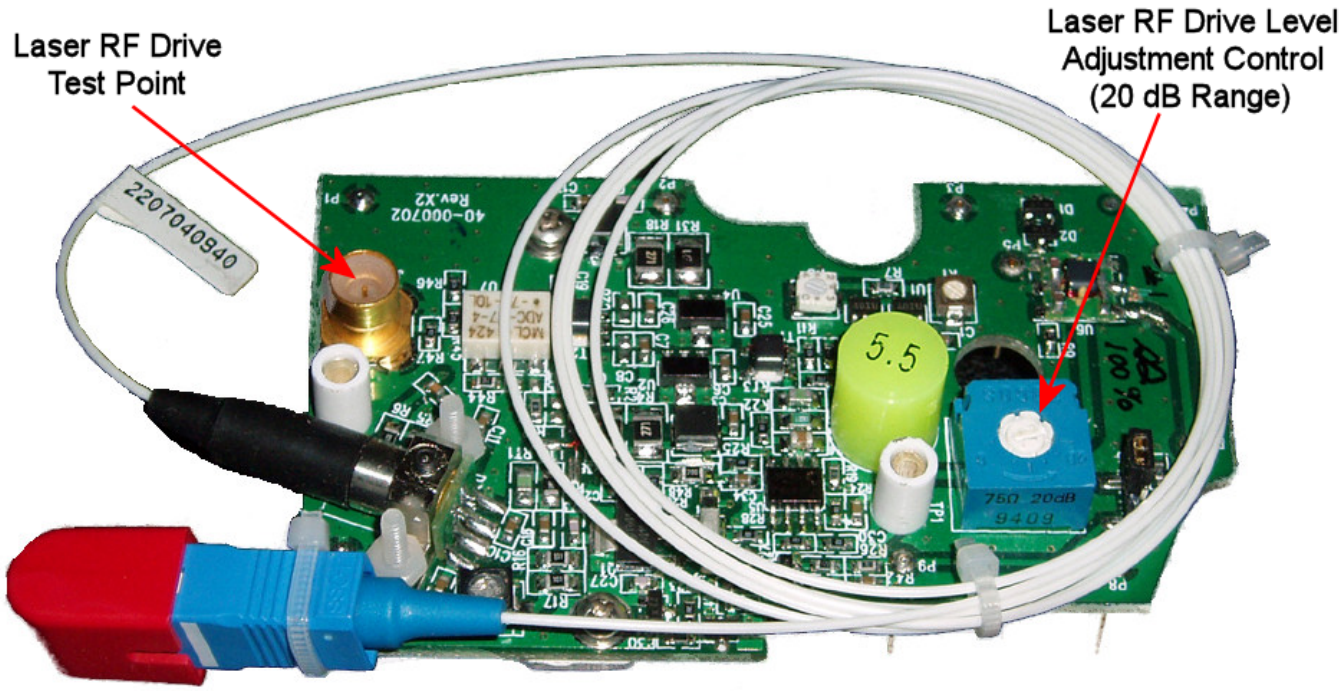

Figure 3 - Location of Laser RF Drive Test Point and RF Drive Level Adjustment Control

Programming the 7-OR-RT to Support Automatic Shutdown

The 7-OR-RT return transmitter supports Automatic Shutdown feature, which halts the transmission of light through severed or improperly mated fiber optic cables You can program the 7-OR-RT to operate in either the ALERT ON or ALERT OFF mode.

In the ALERT ON mode, the 7-OR-RT transmits a return signal over the return fiber as long as the 7-OR optical receiver remains powered and the forward light signal entering the receiver is above a certain pre-set or alert level. If the 7-OR loses power or the forward light signal falls below the pre-set level, the return transmitter will stop transmitting optical signal to the return receiver at the head-end. If the return receiver supports Automatic Shutdown, it will sense the disappearance of light and shutdown the forward transmitter.

In the ALERT OFF mode, the return transmitter will operate as long as the 7-OR module remains powered. It will not trigger Automatic Shutdown it the level of the forward optical signal decreases.

1. Find JP2 shown in Figure 4. The 7-OR-RT module is shipped with the ALERT ON mode.
2. To enable the Automatic Shutdown feature, leave the jumper as shown in Figure 4a. This is the ALERT ON condition.
3. To disable the Automatic Shutdown feature, move the jumper as shown in Figure 4b. This is the ALERT OFF condition.

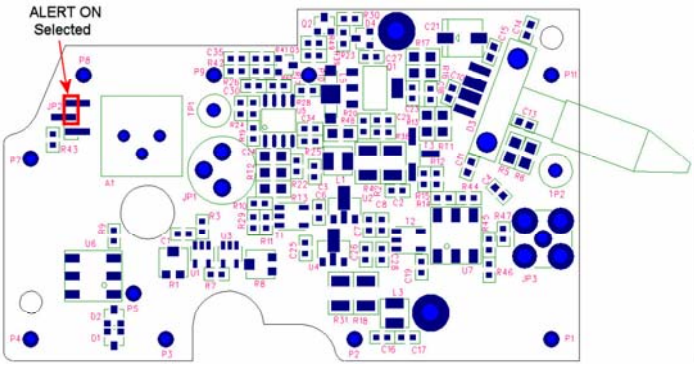

Figure 4a - ALERT ON Mode

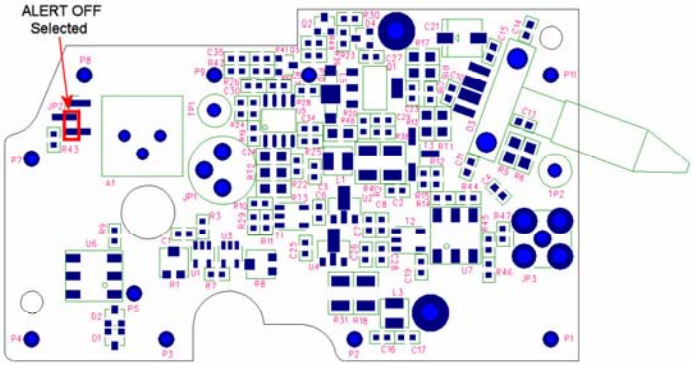

Figure 4b - ALERT OFF Mode

CONNECTING THE PIGTAIL TO THE RETURN FIBER

Next, you will connect the 7-OR-RT module's bare pigtail to the return fiber. The method you use to connect the pigtail to the return fiber depends on whether the incoming fiber is bare or has an optical connector already installed.

Table 3 - All Test Points

Optical Transmitter Power Test Point	Lets you check the power of the return transmitter (1 V/mW)
Laser Bias Test Point	Lets you check the laser bias current to the return transmitter (20 mV/mA)
RF Drive Test Point	Lets you check the RF drive level to the 7-OR-RT
RF Mod Adj.	A control that adjusts the level of the RF drive to the transmitter

TEST POINTS AND CONTROL - REFERENCE

The 7-OR-RT return transmitter has three test points that you can use to monitor the performance of the return transmitter module- In addition. a control on the circuit board helps you set up the 7-OR-RT by adjusting the RF drive level to the transmitter.

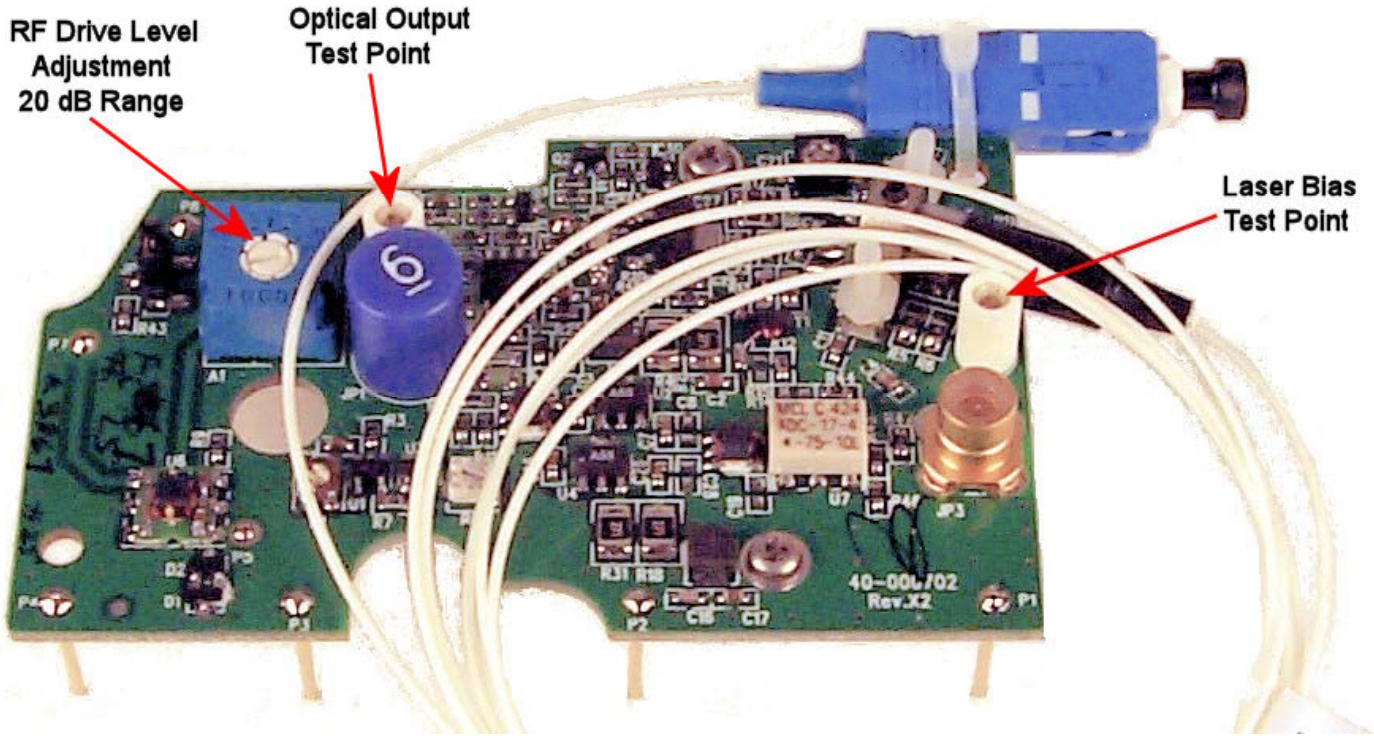

Figure 4 - All 7-OR-RT Test Points and Controls

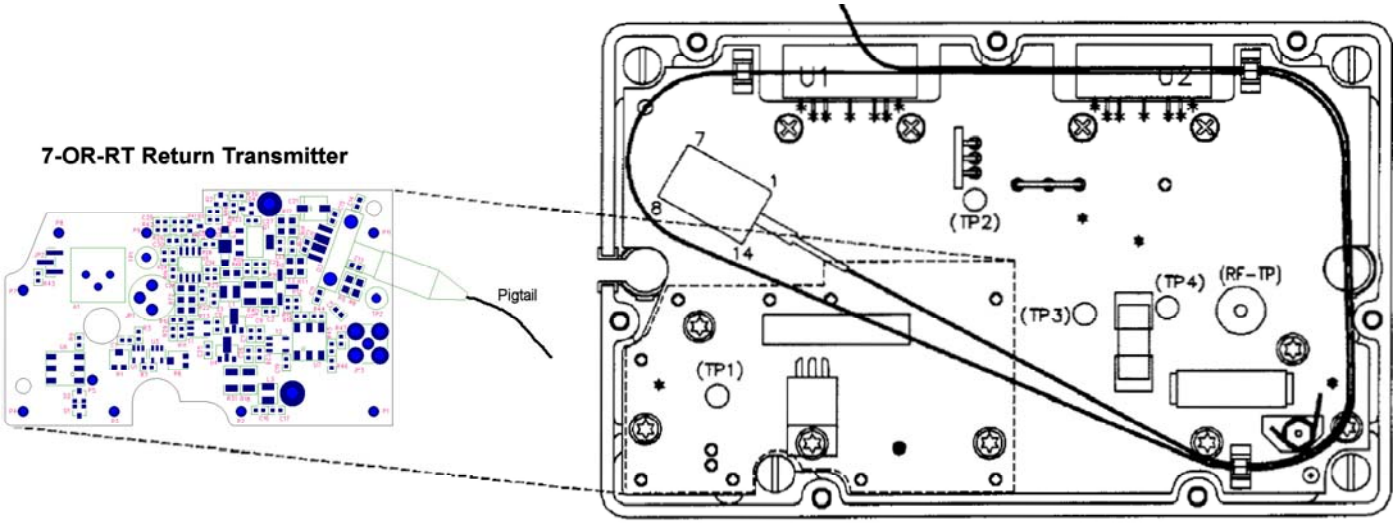

Figure 5 - Mounting the 7-OR-RT Return Transmitter into the 7-OR Node